45° & 90° degree Elbows

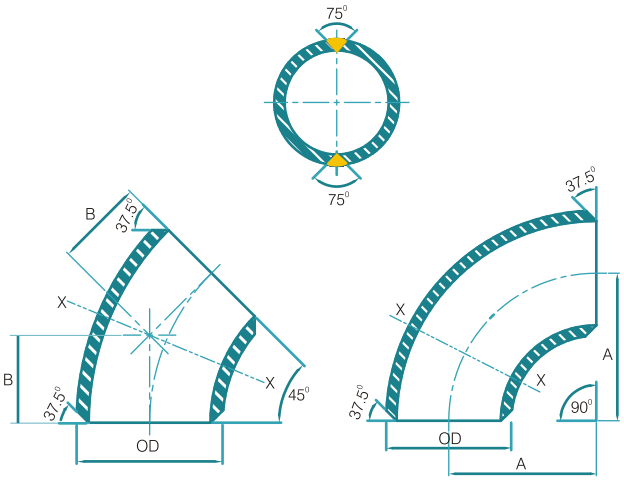

WELDED ELBOW

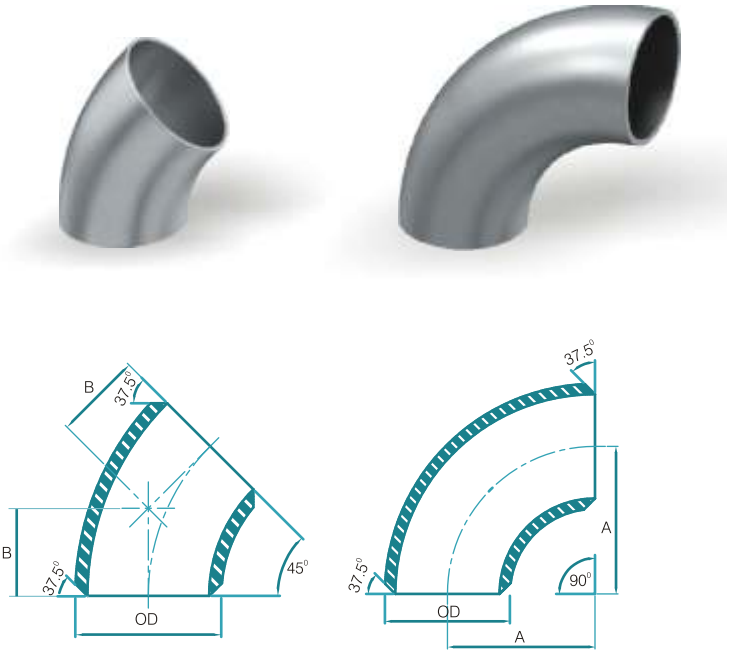

SEAMLESS ELBOW

Inches	NB	OD	SCH5		SCH10		SCH20		SCH30		STD		SCH40		SCH80	
			THK	FORMS	THK	FORMS	THK	FORMS	THK	FORMS	THK	FORMS	THK	FORMS	THK	FORMS
½	15NB	21.30	1.65	s/w	2.11	s/w	-	-	2.41	s/w	2.77	s/w	2.77	s/w	3.73	s/w
3/4	20NB	26.70	1.65	s/w	2.11	s/w	-	-	2.41	s/w	2.87	s/w	2.87	s/w	3.91	s/w
1	25NB	33.40	1.65	s/w	2.77	s/w	-	-	2.9	s/w	3.38	s/w	3.38	s/w	4.55	s/w
1 1/4	32NB	42.20	1.65	s/w	2.77	s/w	-	-	2.97	s/w	3.56	s/w	3.56	s/w	4.85	s/w
1 ½	40NB	48.30	1.65	s/w	2.77	s/w	-	-	3.18	s/w	3.68	s/w	3.68	s/w	5.08	s/w
2	50NB	60.30	1.65	s/w	2.77	s/w	-	-	3.18	s/w	3.91	s/w	3.91	s/w	5.54	s/w
2 ½	65NB	73.00	2.11	s/w	3.05	s/w	-	-	4.78	s/w	5.16	s/w	5.16	s/w	7.01	s/w
3	80NB	88.90	2.11	s/w	3.05	s/w	-	-	4.78	s/w	5.49	s/w	5.49	s/w	7.62	s/w
3 ½	90NB	101.60	2.11	s/w	3.05	s/w	-	-	4.78	s/w	5.74	s/w	5.74	s/w	8.08	s/w
4	100NB	114.30	2.11	s/w	3.05	s/w	-	-	4.78	s/w	6.02	s/w	6.02	s/w	8.56	s/w
5	125NB	141.30	2.77	w	3.40	w	-	-	-	-	6.55	w	6.55	w	9.53	w
6	150NB	168.30	2.77	w	3.40	w	-	-	-	-	7.11	w	7.11	w	10.97	w
8	200NB	219.10	2.77	w	3.76	w	6.35	w	7.04	w	8.18	w	8.18	w	12.70	w
10	250NB	273.00	3.40	w	4.19	w	6.35	w	7.80	w	9.27	w	9.27	w	15.09	w
12	300NB	323.80	3.96	w	4.57	w	6.35	w	8.38	w	9.53	w	10.31	w	17.48	w
14	350NB	355.60	3.96	w	6.35	w	7.92	w	9.53	w	9.53	w	11.13	w	19.05	w
16	400NB	406.40	4.19	w	6.35	w	7.92	w	9.53	w	9.53	w	12.7	w	21.44	w
18	450NB	457.00	4.19	w	6.35	w	7.92	w	11.13	w	9.53	w	14.27	w	23.83	w
20	500NB	508.00	4.78	w	6.35	w	9.53	w	12.70	w	9.53	w	15.09	w	26.19	w
22	550NB	559.00	4.78	w	6.35	w	9.53	w	12.70	w	9.53	w	-	-	28.58	w
24	600NB	610.00	5.54	w	6.35	w	9.53	w	14.27	w	9.53	w	17.48	w	30.96	w

S-Seamless ; W-Welded
Applicable for pipes with BUTT weld ends only.
Welded Construction available in either ERW construction (or) Fabricated Construction.

Note: Ref.Standard ASME B16.9.2003

ПОТОК®
Pipes & Fittings